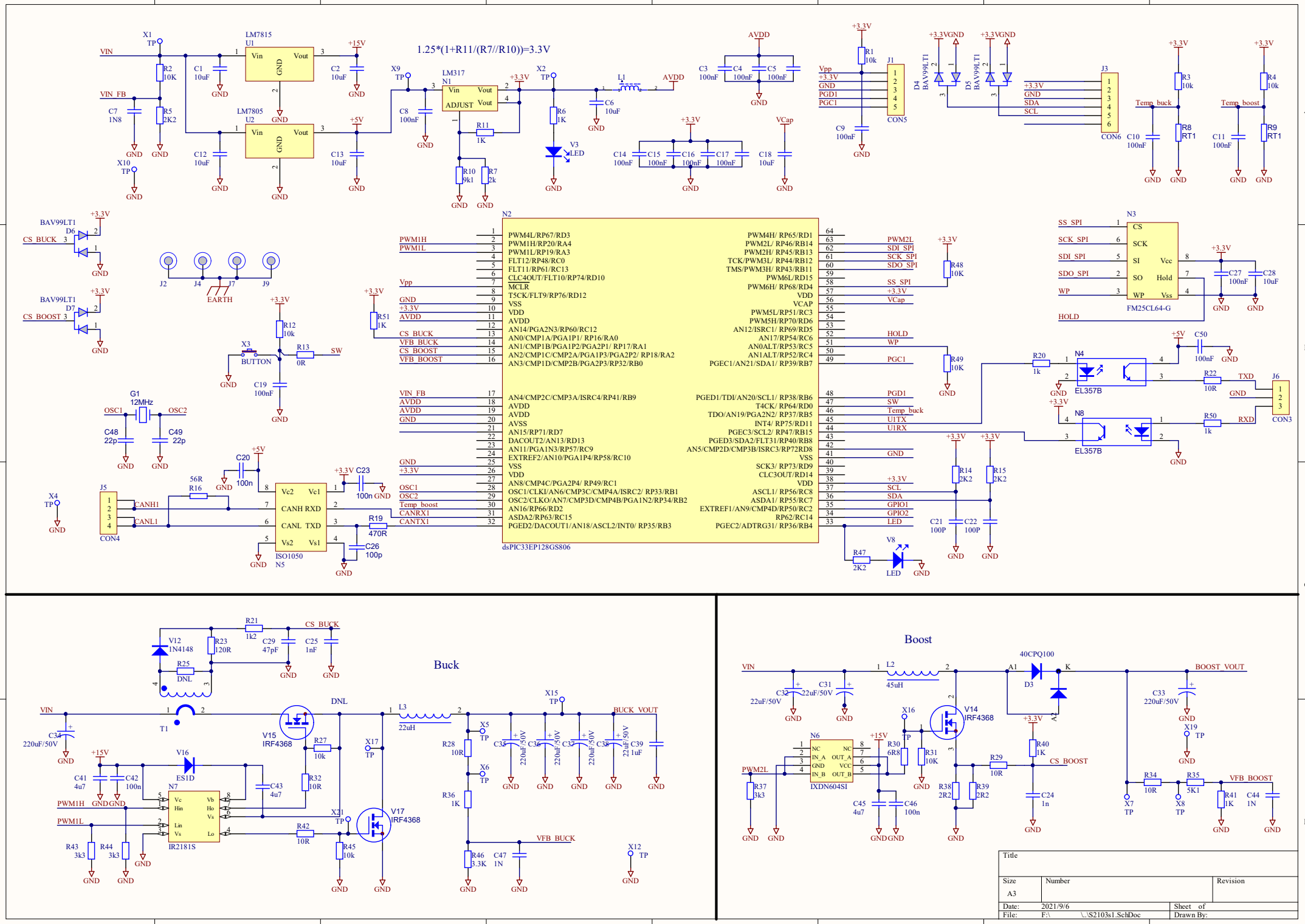
1.25*(1+R11/(R7//R10))=3.3V
LM7815
U1
LM7805
U2
LM317
N1
N2
dsPIC33EP128GS806
N3
FM25CL64-G
N4
EL357B
N8
EL357B
N5
ISO1050
N7
IR2181S
N6
IXDN604SI
V14
IRF4368
V15
IRF4368
V17
IRF4368
Buck
Boost
40CPQ100
BAV99LT1
CON5
CON6
CON3
CON4
EARTH
BUTTON
12MHz
ES1D
1N4148
DNL
L1
L2
L3
22uH
45uH
BOOST_VOUT
BUCK_VOUT
VFB_BUCK
VFB_BOOST
CS_BUCK
CS_BOOST
Temp_buck
Temp_boost
SW
CANH1
CANL1
CANH RXD
CANL TXD
Vc2 Vc1
Vs2 Vs1
Vin Vout
ADJUST
Vpp
VCap
AVDD
VIN
VIN_FB
PWM1H
PWM1L
PWM2L
SS_SPI
SCK_SPI
SDI_SPI
SDO_SPI
WP
HOLD
TXD
RXD
GPIO1
GPIO2
LED
SCL
SDA
PGD1
PGC1
PGD2
PGC2
OSC1
OSC2
CANRX1
CANTX1
Temp_boost
Title
Size
A3
Number
Revision
Date: 2021/9/6
File: F:\ \..\S2103s1.SchDoc
Sheet of
Drawn By:

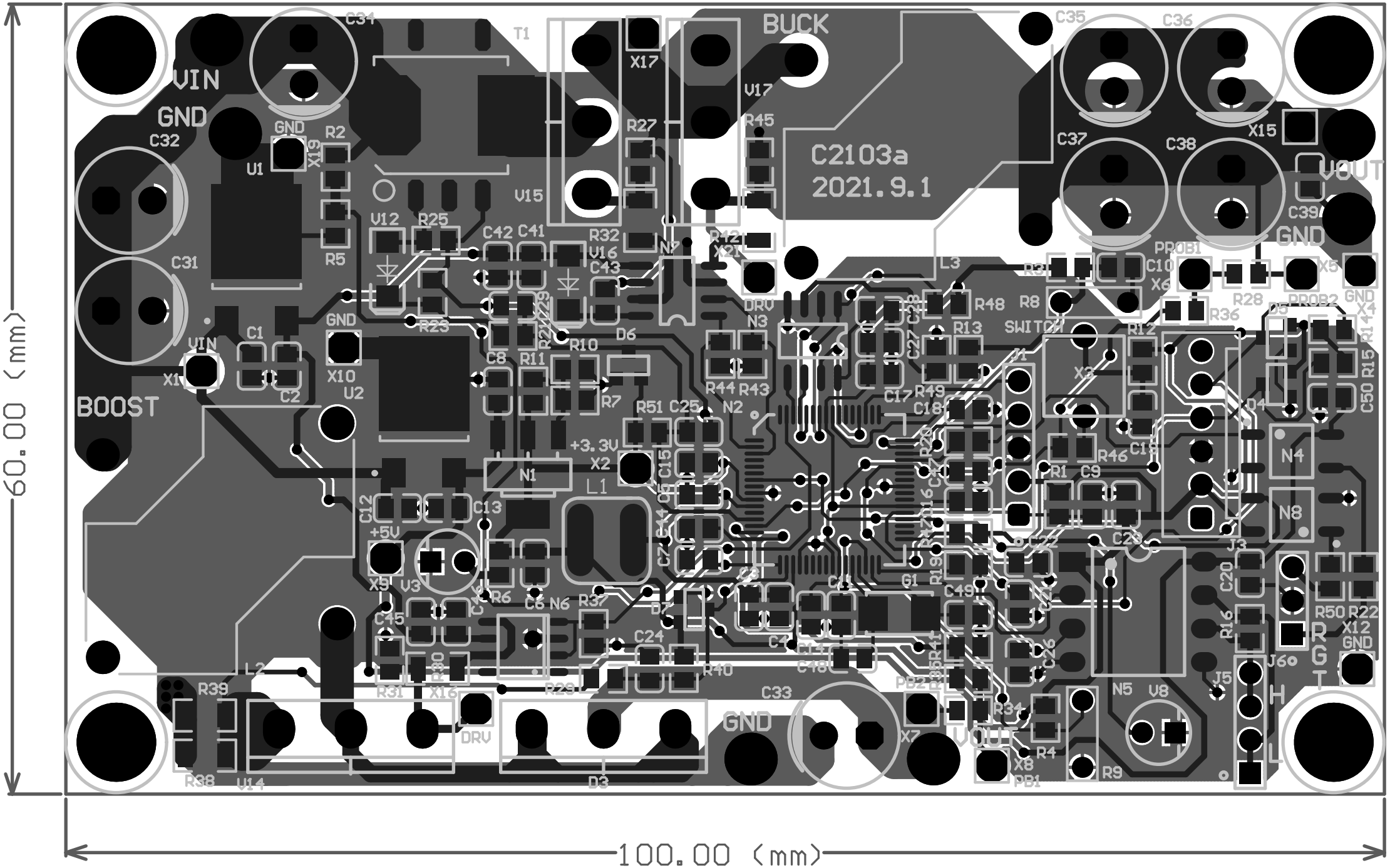
VIN
GND
BUCK
C2103a
2021.9.1
VOUT
GND
BOOST
SWITCH
PROB1
PROB2
+3.3V
+5V
DRV
GND
VOUT
60.00 (mm)
100.00 (mm)